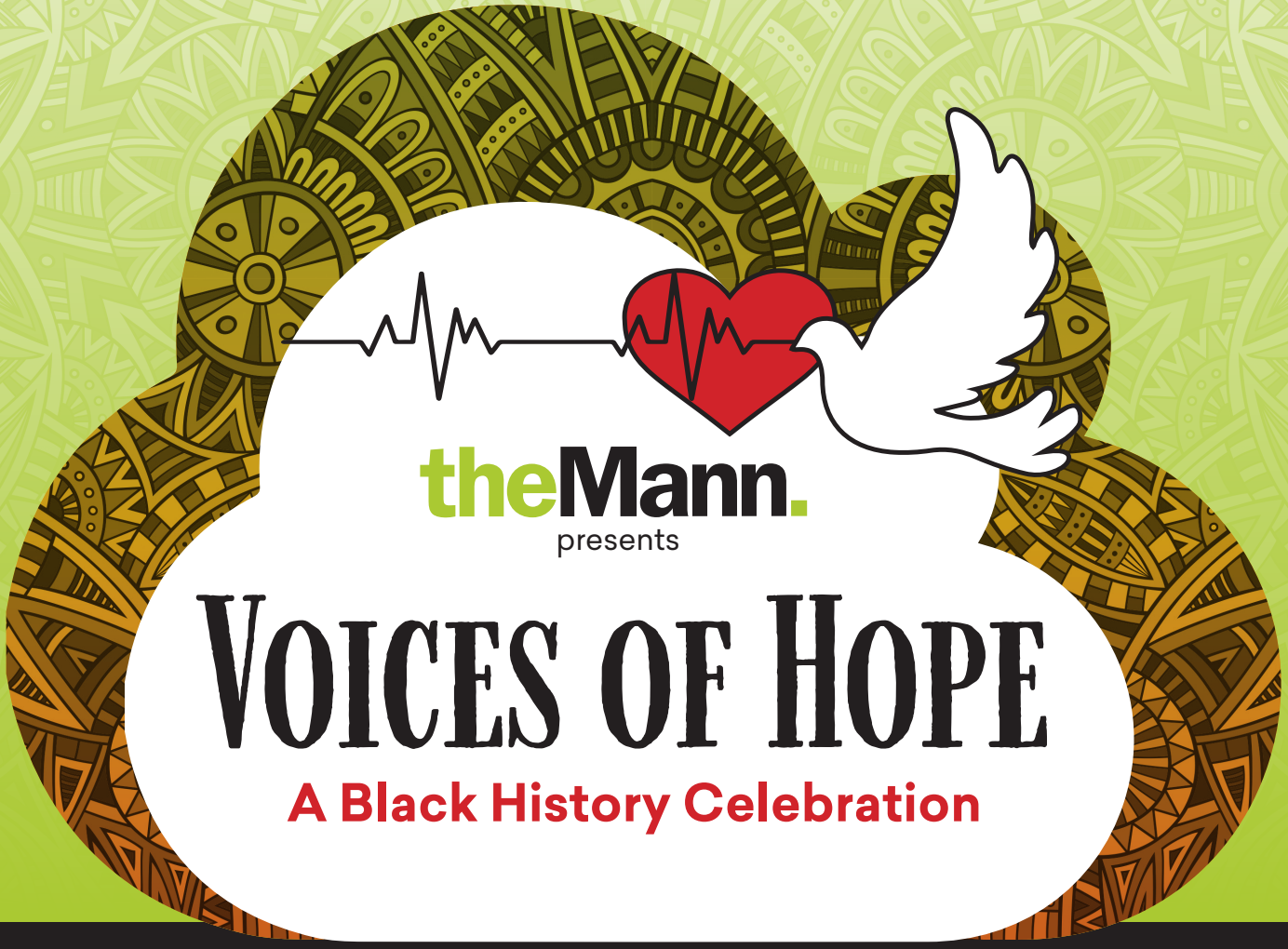

theMann.
presents

# VOICES OF HOPE

## A Black History Celebration

## Activity Guide
## Jazz

MannCenter.org/VoicesofHope

# Table of Contents

What is Jazz? 3

Nature of Jazz / Instrumentation 4

Chris' Jazz Cafe / Famous Jazz Artists 5

Try to Be a Jazz Artist at Home 6

Connect the Dots 7

Performance by Eric Wortham II 8

Sources 9

# What is Jazz?

Jazz music is one of a select few styles of music that was born in the United States! Born in the South in the 1800s, Jazz music developed as a unique blend of many types of music, including gospel music, brass bands, African music, Spanish music, and the blues. As suggested by its name, the blues recognize the pain of lost love and injustice and an outlet for expression. The blues evolved from music sung in church, at work, and in the field. These attributes are equally present in jazz music, which explains how blues serve as the foundation for jazz.

Jazz uses its intricate rhythmic and melodic pairings to convey a story, and artists typically improvise on pieces to create a unique experience. Improvisation is creating or making up music as you go. It is the most defining element of jazz. There is an overriding melody and structure to the song, but the musicians play it differently each time. Usually, each musician gets the opportunity to solo during the song. They improvise during their solo, trying out new tricks and ideas to see what works. Their improvisation changes every day and thus is influenced by their emotions at present, in real-time. There is tremendous variety in jazz, but most jazz is very rhythmic, has a forward momentum called "swing," and uses "bent" or "blue" notes. You can often hear "call and response" patterns in jazz, in which one instrument, voice, or part of the band answers another. Jazz features syncopated rhythms—rhythms with stimulating, offbeat accents. The several jazz groups' instruments are usually played in different rhythms that unite to create an uplifting effect.

## Louis Armstrong & The Creole Jazz Band




*King Oliver's Creole Jazz Band was the first black group to record. King Oliver, background, played cornet as did Louis Armstrong, kneeling with a slide trumpet.*

Courtesy of the Hogan Jazz Archive, Tulane University

## The Nature of Jazz

Jazz musicians place a high value on finding their sound and style. Take, for example, trumpeters Miles Davis and Louis Armstrong. While both played the same instrument, Miles Davis rarely played the trumpet with vibrato, while Louis Armstrong always played with vibrato. Vibrato is a rapid, slight variation in an instrument's pitch or a singer's voice pitch. Jazz musicians like to play their songs in their distinct styles, and so you might listen to a dozen different jazz recordings of the same music, but each will sound different. The musicians' playing styles make each version different, and so do the improvised solos. Jazz is about making something familiar - say a song - into something fresh and make something shared – say a familiar tune - into something personal. These are just some of the elements that make jazz such a vital art form and why many people consider it "America's classical music."

## Instrumentation

Although jazz can be played on any instrument (including the human voice), the most common instruments on which jazz is played are saxophone, trumpet, trombone, piano, bass, guitar, and drums. The drum set was invented as a direct product of jazz music. The particular sound each jazz musician makes on their instrument is as important as the instrument itself.
















## Chris' Jazz Café

In the Mann Music Room's *Voices of Hope* Jazz Episode, Mr. Eric Wortham II performs at the famous Chris' Jazz Cafe, located in Center City, Philadelphia. Chris' is a premier jazz institution in a city known for producing revered musical artists such as John Coltrane, Dizzy Gillespie, Billie Holiday, and Ethel Waters. Founded in 1989, Chris' Jazz Cafe is the longest continuously operating jazz club in Philadelphia's history, attracting visitors from more than 160 countries and all 50 states. You can check out more on Chris' online at www.chrisjazzcafe.com.

## Famous Jazz Artists



**Louis Armstrong**



**Charlie Parker**



**Billie Holiday**

# Try to Be a Jazz Artist at Home!

Let's improvise using rhythms and words:
Pick your favorite nursery rhyme, for example, "Twinkle Twinkle Little Star."
We will start singing the song, and in the middle, we will stop to add a section of claps. This process is called improvising, and we are going to follow the syllables of individual words to create a rhythm.

Here are some examples of words/rhythms that fit into the Twinkle song:

Stars =  = one clap

Sparkle =  = two claps

Universe = 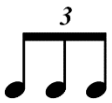 = three claps

Improvising =  = four fast claps

Now we will give an example of how to put it all together!

## Sing:

"Twinkle Twinkle Little Star, How I wonder what you are."

"Up above the world so high, Like a diamond in the sky" [STOP]

[IMPROVISE WITH CLAPS]

Star  Improvising  Universe 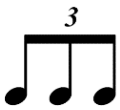 Sparkle 

Sparkle  Sparkle  Universe  Star 

[SING AGAIN] "Twinkle Twinkle Little Star, How I wonder what you are."

**Now it's your turn!!!**

## Connect the Dots

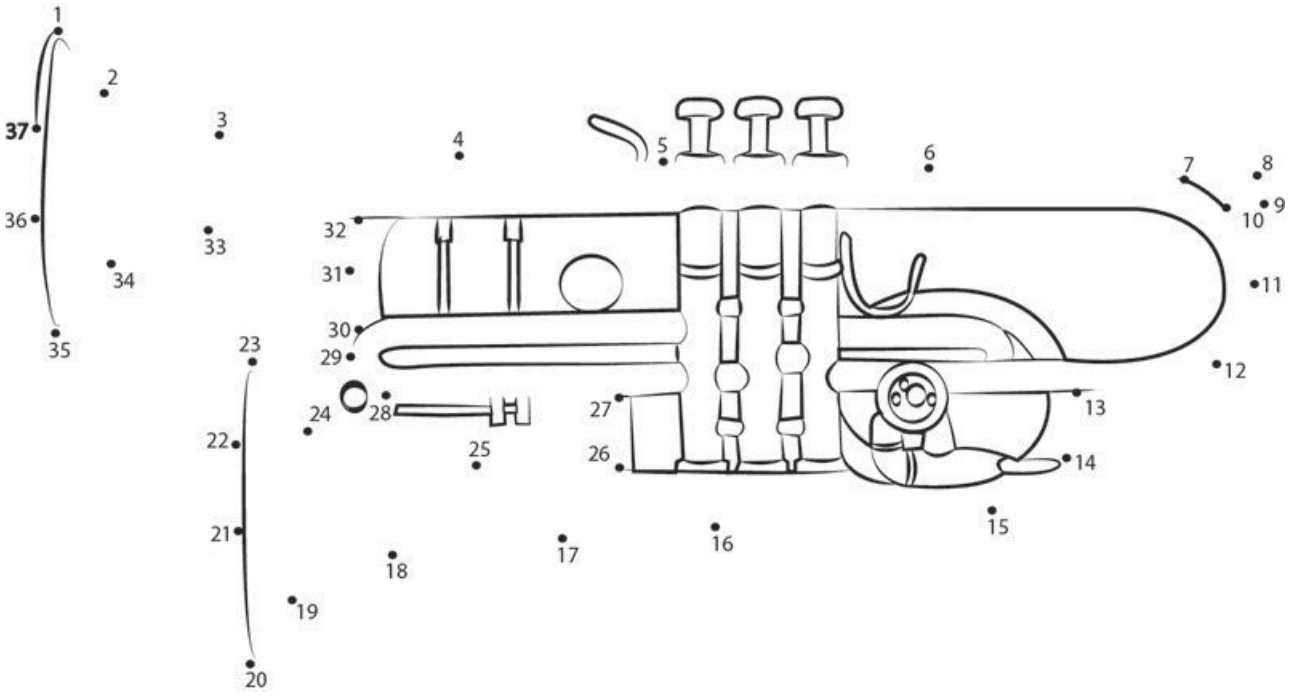


## Can you name this instrument?

_____

Answer: trumpet

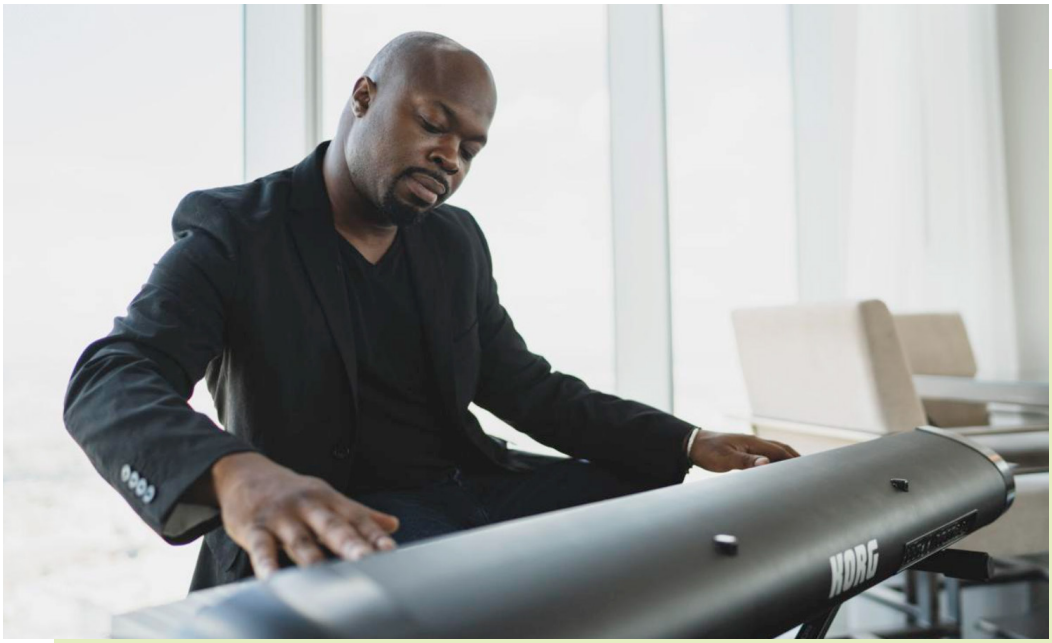


Bellosound Photo/Max Grudzinski

**Eric Wortham II** is a jazz and classically trained accomplished pianist, composer, songwriter, and producer. He is best known for captivating audiences with his soulful rhythmic feel, innovative hand technique and precise hand speed. Eric has toured with Grammy award-winning artists such as Jill Scott and Adele, and has collaborated with Vivian Green, Aloe Blacc, Kindred The Family Soul, Music SoulChild, and Jeff Bradshaw.

**Performance link**

*Sources:*


https://www.classicsforkids.com/music/jazz.php

https://wyntonmarsalis.org/discography/title/jazz-for-kids

https://philadelphiaencyclopedia.org/archive/jazz/

https://kids.britannica.com/students/article/jazz/275139

https://americanhistory.si.edu/smithsonian-jazz/education/what-jazz

https://www.inquirer.com/philly/opinion/commentary/philly-history-jazz-duke-ellington-louis-armstrong-bessie-smith-20180511.html

https://www.britannica.com/art/jazz